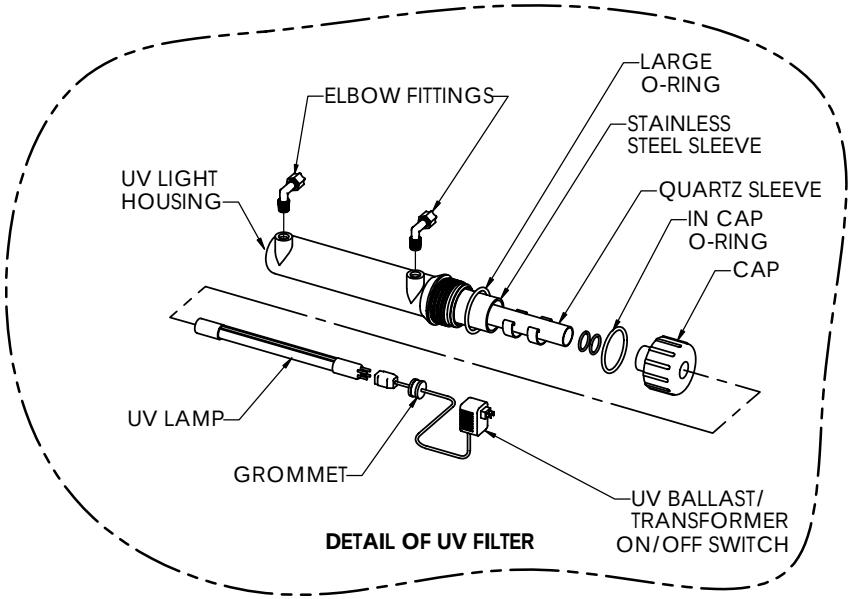

DETAIL OF UV FILTER

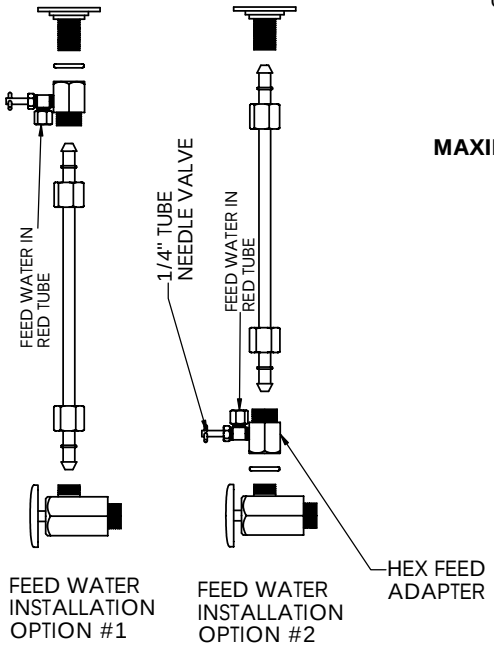
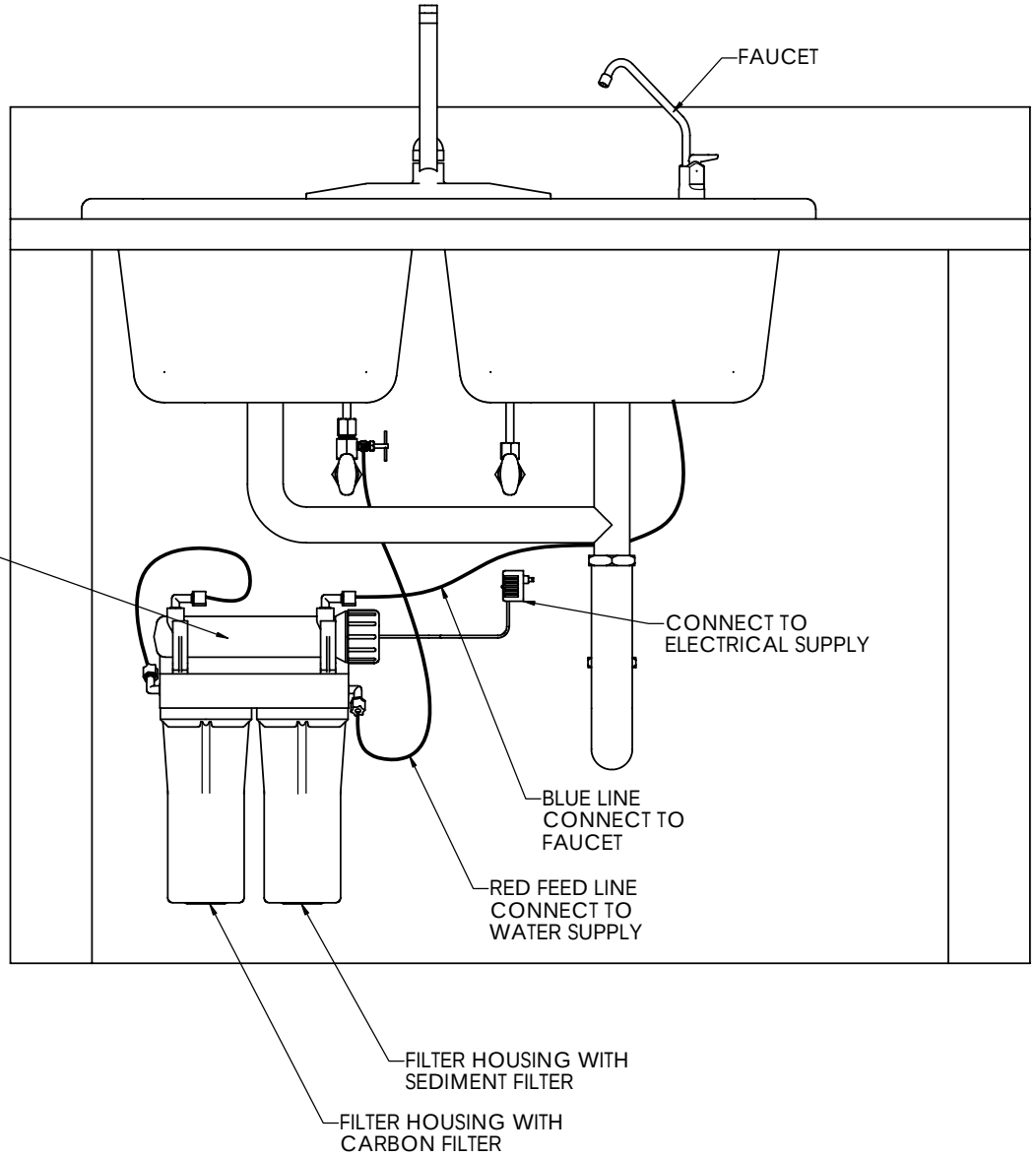
WARNING
MAXIMUM PRESSURE 75 PSI